Interfacing OLED Display to MCU STC12LE5A60S2

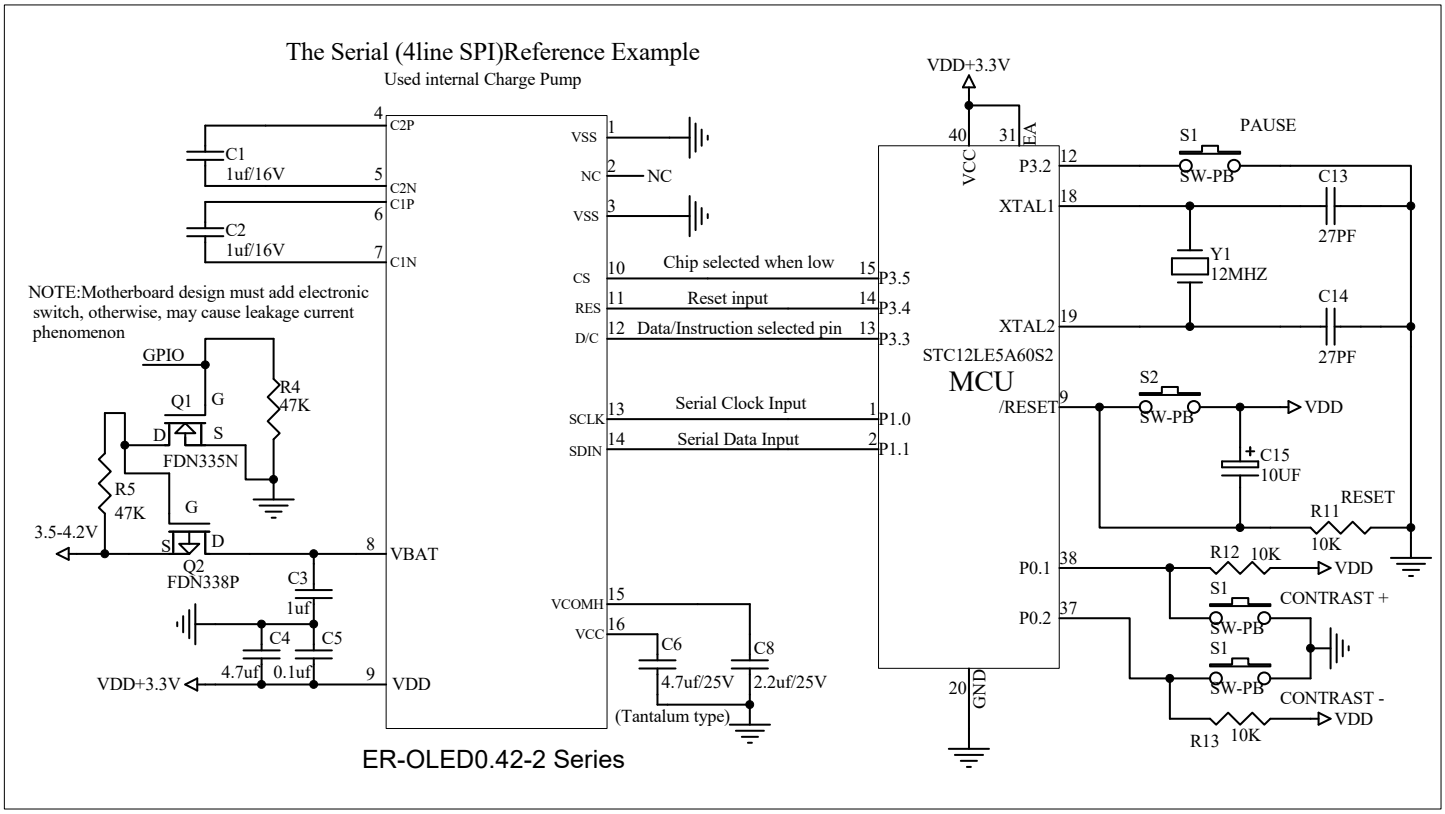

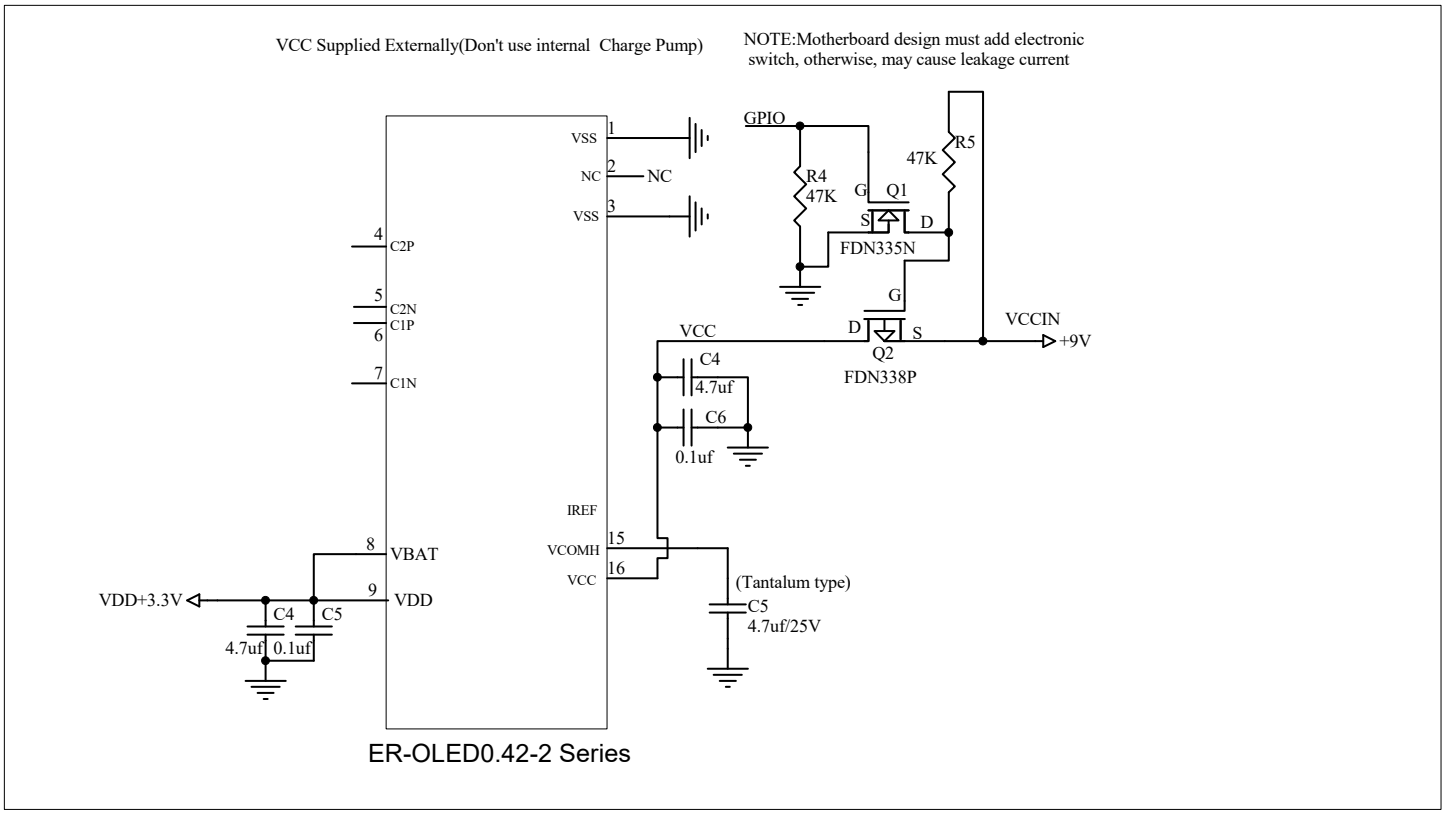

Title	EASTRISING TECHNOLOGY CO.,LTD.	
Size A	Number ER-OLED0.42-2 Series	Revision A0
Date: Mar-17-2025	Sheet of 1	
File	Drawn By Javen	